Wireless Thermostat Owners Manual

Model TESPW22

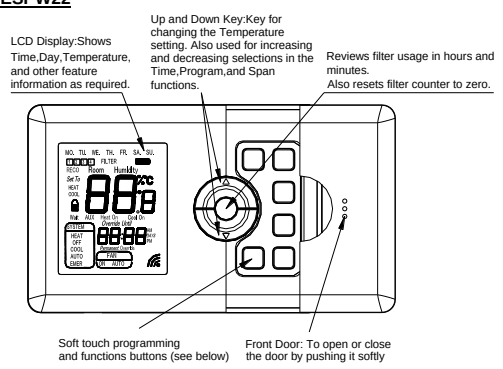

FEATURES

Structure of thermostat and explanation for the keypads

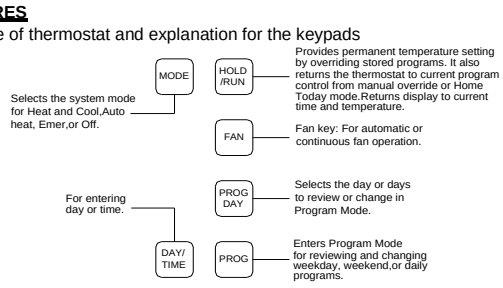

We are pleased you have selected one of our broad line of wall thermostats. Our products are manufactured to high quality standards and are designed for years of service.

REMOVE THE MYLAR LABEL FROM THE LCD DISPLAY WINDOW.

ARMCHAIR PROGRAMMING

1. You can program your thermostat prior to installation by following these instructions and starting at the configuration menu. This can be done while you relax in your favorite chair and is a very good way to familiarize yourself with all the functions of your thermostat.

The following time and temperature settings are pre-programmed into the thermostat:

		Temperature in ˚F (˚C)	
Program Number	Time	Heat	Cool
1	6:00 am	68˚F(20˚C)	78˚F(26˚C)
2	8:00 am	60˚F(16˚C)	85˚F(29˚C)
3	4:00 pm	68˚F(20˚C)	78˚F(26˚C)
4	10:00 pm	60˚F(16˚C)	82˚F(28˚C)

2. The thermostat provides a 4 minutes delay after shutting of the heating or cooling system before it can be restarted. This feature will prevent damage to your compressor caused by rapid cycling. Note that this delay also applies to the heating system control. It does not provide a delay when there are power outages. You can select the function on or off at the configuration.

TEMPERATURE RANGE

3. This thermostat can be programmed between 45˚F and 95˚F (7˚C and 35˚C). However, it will display room temperatures from 30˚F to 99˚F (0˚C and 37˚C)..This thermostat will automatically cutoff in Heat mode if the temperature rises above 95˚F (35˚C), and automatically cutoff in Cool mode if the temperature drops below 45˚F (7˚C).

POWER SUPPLY

4. The thermostat is supplied with a Li-battery. You can charge the Lithium battery through a USB cable (included) connected to a PC. During the charge process the battery icon will flash on and off.

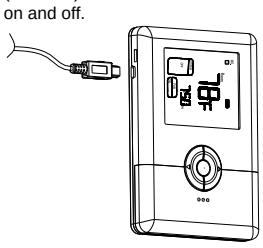

Note: The Lithium battery should be charged over 12 hours for the first 3 times to properly condition the battery.

Low Battery Warning

5. Your thermostat has a battery warning system. When the batteries are first detected to be weak, the first stage low battery warning is indicated by battery symbol flashing on the LCD display. At your earliest convenience, you need to charge the batteries through USB. During the charging process the battery icon will flash one by one. When the battery charge completes, the battery icon will disappear.

INSTALLATION

What You Need

This thermostat includes two #8 slotted screws and two wall anchors for mounting. To install your thermostat, you should have the following tools and materials.

■ Slotted Screwdriver(s) ■ Small Philips screwdriver ■ Hammer

■ Electric drill and 3/16" bit

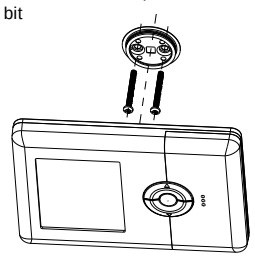

OPERATION

Standby mode

When remove the thermostat from the box, the temperature will update after a few second. You can choose to set the thermostat or enter "Standby" mode. Press and hold the middle round button which is between the "UP" and "DOWN" keys for 5 seconds, "PE" will be displayed on the LCD to indicate Standby Mode. When you are ready to use the thermostat, press and hold the round button for 5 seconds to exit Standby Mode.

NOTE: We suggest you to change the thermostat to "Stand By" mode when you don't use the thermostat for a long time.

Fan Operation

If your system does not have a G terminal connection, skip to the next section (Heating system)..

1. Turn on the power switch of the system.
2. Press FAN key to ON mode. The blower should begin to operate.
3. Press FAN key to AUTO mode. The blower should stop immediately

Heating System (SPAN=2,SP2=2)

1. Press the MODE key until HEAT shows on the LCD display.
2. Press to adjust thermostat setting to 2℉（1°C）above room temperature. The heating system should begin to operate. The display should show "Heat On". However, if the "Wait" is displaying and flashing, the compressor lockout feature is operating (see Configuration menu, item 10).
3. Adjust temperature setting to 4℉（2°C）above room temperature. If your system configuration is set to "HP1" or "HP2", the auxiliary heat system should begin to operate and the display should show "AUX Heat On".
4. When the room temperature above the thermostat setting, the heating system should stop operating.

Emergency System

EMER MODE bypasses the Heat Pump to use the heat source wired to terminal E/W1 on the Controller. EMER Mode is typically used when the compressor has failed or the outdoor temperature is too cold to run the heat pump.

1. Press the MODE key to select EMER mode, "EMER" will show on the display.
2. Press to adjust thermostat temperature setting above room temperature. The Emergency. Heating system will begin to operate. The display will show "Heat On" "EMER" to indicate that the system is operating.
3. When the room temperature above the thermostat setting. The Emergency heating system should stop operating.

Cooling System (SPAN=2,SP2=2)

1. Press MODE key to select the Cool mode.
2. Press to adjust thermostat setting below room temperature. The blower should come on immediately, followed by cold air circulation. The display should show "Cool On".
3. Adjust temperature setting to 4℉（2°C）below room temperature. The second stage cooling should begin to operate.
4. When the room temperature below the thermostat setting. The cooling system should stop operating.

CONFIGURATION MENU

INSTALLER CONFIGURATION MENU				
Step	Press Button	Displayed (Factory Default)	Press up or down key to select	Comments
1	Mode		System OFF	System must be OFF to run Configuration menu
2	PROG	STD2	SS1, HP2, HP1	Selects System Configuration Conventional,SS1,Heat Pump 1 or 2 stage
3	PROG	FAN(HE)	HG	Select Fan GAS/ELECTRIC(Only used for STD2 or SS1)
4	PROG	RECO(OF)	ON	Recovery function ON or OFF
5	PROG	SPAN(2)	1,3	Cycle Rate Selection-Stage 1 (1 Fast 3 Slow)
6	PROG	BLIT(ON)	OF	BackLight On or OFF
7	PROG	SP2(2)	1,3	Cycle Rate Selection-Stage 2 (1 Fast 3 Slow)
8	PROG	CF(F)	C	Selects temperature display ° F or °C
9	PROG	HOUR(12)	24	Selects time format 12 or 24 Hr
10	PROG	COHP(ON)	OF	Selects Compressor Lockout OFF or ON
11	PROG	CANL(01)	01-10	Selects Communication Channels. Requires thermostat to be re-matched
12	PROG	CRES(0)	1	This function is not used in installer configuration. This function is for Matching you thermostat and controller.
13	PROG	TEST(0)	1,2	Selects"2"to test system outputs. Turn off power to condensing unit before using this function. There is no use for "1".
14	PROG	FACT(0)	1	To restore factory defaults. Select "1" if desired, all the setting will go back to factory default. Requires thermostat to be re-matched

The configuration menu allows you to set certain thermostat operating characteristics to your system or personal requirements. The configuration menu table summarizes the configuration options and explanation of each option.

1) Set SYSTEM MODE to OFF, then press PROG key and hold it for 5 seconds to enter configuration menu. The display will show the first item in the configuration menu.. Press the PROG key to step to the next menu item. To exit the menu and return to the program operation, press Hold/Run Key. If no keys are pressed within fifteen Seconds, the thermostat will revert to normal operation.

2) The display indicates "STD2" (default for multi-stage mode) in the display. Select the system "SS1","HP1" or "HP2" by pressing the up or down key. In "SS1" and "STD2" configuration, EMER mode is useless.

3）This thermostat is configured from the factory to operate an electric heat or heat-pump system that requires the thermostat to turn on the fan on a call for heat. If you system is a heat/cool, fossil fuel (gas, oil, etc.), forced air system, SELECT the HG. The HE/HG must be set to match the type of Auxiliary heat your system uses for proper operation in the EMERGENCY mode.

4) Select Energy Management Recovery OFF or ON

Your thermostat is set "OF" from the factory. You can select "ON" to gradually recover the room temperature from an energy saving program to your comfort program. Therefore, the thermostat may turn your system on several minutes prior to your programmed start time.

5) Fast or Slow Cycle Selection (one stage)

6) Select Backlight function OFF or ON

7) Fast or Slow Cycle Selection (two stage)

8) Select °F or °C Readout. Changes the display readout to Centigrade or Fahrenheit as required. When you change this parameter the thermostat will reset the temperature settings to it's default settings and you will have to re-program the temperature setting as your need. You can familiar with the detail step through the following section "Manual Programming".

9) Selects time format display 12hours or 24hours

10) Select Compressor Lockout COMP OFF or ON

Selecting COMP ON will cause the thermostat to wait 4 minutes before turning on the compressor if the heating and cooling system loses power. It will also wait 4 minutes minimum between cooling and heating cycles. This is intended to help protect the compressor from short cycling. Some newer compressors already have a time delay built in and do not require this feature. When the thermostat compressor time delay occurs, it will display "Wait" for about 4 minutes.

11) This mode is used to set the communication channels. There maybe Interference signal which affect the communication between thermostat and Controller. You can change the channel to avoid this. The thermostat and controller must be re-matched after changing channels.

12) Use up key to change the parameter to "1", the thermostat will match with the controller automatically. You can familiar with the detail step through the following section "MATCHING".

13) Change the parameter to "2" by pressing the "up" key. The relays will open one by one. This item is only for factory testing, not for user. If the wires are still connected, this test may be dangerous. User should keep this parameter in "0".

14) Select "1" to restore factory default settings. This will lead the thermostat to be re-matched the controller.

Setting Time And Day

■ Initial display after power-up. The temperature will update after a few seconds.

■ During time and day setting mode, the temperature display will disappear.

EXAMPLE: Set the Thermostat to the current time of 7:58 pm. on Monday Refer to Figure below.

Press **Display Reads**

Step 1 DAY/ TIME

■Press Day/Time key. The current hour and AM or PM indicator are flashing.

■Press to change the hour. Note AM/PM

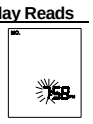

Step 2 DAY/ TIME

■Press Day/Time key again. The current min is flashing.

■Press to change the min.

Step 3 DAY/ TIME

■Press Day/Time key. The current week is flashing.

■Press to change the week.

After about 30 seconds, the thermostat will return to normal automatically.

Manual Programming

■ Your thermostat can be programmed for weekdays and weekends, or have unique programs for each of the 7 days of the week. Use Weekday / Weekend Programs or 7-day Programming to enter or revise programs to match your Personal Program Schedule. The same steps are used when entering programs for the first time or revising programs entered during Auto Programming.

■ Familiarize yourself with Manual Programming, so that you can easily modify your programs as your comfort needs change. The example below demonstrates the Manual Programming method.

NOTE:

1. The program time can be set in 10-minute increments, and remains the same for both Heat and Cool programs.
2. The program temperature can be set in increments of 1˚F (1˚C).
3. The Heat setpoint can not be set higher than the Cool set point, and the Cool setpoint can not be set lower than the Heat set point.
4. When setting the program time, note the AM/PM indicator.
5. With the Auto Recovery feature enabled, you do not need to set your comfort program times early. Auto Recovery will determine how early to turn your system on, so that the room is comfortable at the program time.

Weekday/Weekend Programming

Weekday Programs

Press **Display Reads**

■ Normal display of time, temperature, and day of the week.

Step 1 PROG DAY

■ Selects days Mon to Fri for same set of 4 programs each day.

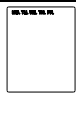

Step 2 PROG

■ Program indicator(1) is displayed.

■Mon to Fri is displayed.

■The Program hour indicator are flashing. Press to change the hour.

■ Note AM/PM

Step 3 PROG

■Press again to change to the minute position. The period minute will be flashing.

■ Press to change the minute

Step 4 PROG

■ Press again to change to the program COOL set temperature. The period program will be flashing.

■ Press to change the temperature. Note HEAT/COOL

Step 5 PROG

■ Press again to change to the program HEAT set temperature. The period program will be flashing.

■ Press to change the temperature.

■ Note HEAT/COOL

Weekday program 1 is complete.

Step 6 ■ Press PROG to move to program 2,3, and 4 and follow the same steps.

Use PROG ■ to insert or change time and temperature of other Programs.

PROG DAY ■Selects weekend days Sat, Sun for same set of 4 programs each weekend day.

■ Follow steps 2-4 to enter programs.

Similar to weekday programming.

PROG DAY PROG to insert weekend programs.

Similar to weekday programming.

PROG DAY PROG to insert Individual programs.

NOTE: Another approach to programming is to first program all weekdays Mon through Fri and Sat and Sun as same programs. Then, display and change the programs of only those days which will have different programs.

Temporary Manual Override

To temporarily change the current set temperature without affecting your program:

■ Press up or down key for less than 1 second to enter Manual Override mode.

■ Press up or down to change to your desired new temperature.

■ Press to RUN normal mode or wait 20 seconds for it to return automatically.

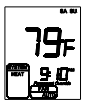

HOLD /RUN ■ The current program number will flash to signify the Temporary Override. At the next program change, the Temporary Override is canceled, and the next program temperature becomes the setpoint temperature.

To end the Temporary Manual Override:

HOLD /RUN ■ Press HOLD key thrice. This will return the set temperature to the current program set temperature.

NOTE: The Auto Season Changeover feature will operate while the thermostat is in Temporary Manual Override. Refer to the Auto Season Changeover feature for more information.

Permanent Override or a Designated Day Override

To hold your Manual Override for vacation or Until a Designated Day.

HOLD /RUN ■ Press to make the current program temperature the HOLD temperature. "Permanent Override" will be displayed on the LCD, and the Program number will disappear.

■ Follow the Temporary Manual Override instructions above to change the Permanent Manual Override temperature.

HOLD /RUN ■ You can confirm the temperature by pressing for less than 1 second.

DAY/ TIME ■ Press again. Hold day will be displayed on the LCD and the clock will disappear.

■ Press Day/Time key to adjust override days.

■ Follow the Permanent Override instructions above to change the Designated Day Manual Override temperature.

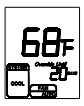

To end Override:

Under Permanent Override press the Hold key twice. Under a Designated Day Override press the Hold key once. The thermostat will return to the current program.

Auto Season Changeover

When the System Mode is in AUTO position, the thermostat will automatically change between Heating and Cooling systems, press UP/DOWN key to adjust the setpoint under the mode showed on the display (Heating/Cooling). Set temperature will be confirmed 3 seconds after finish your setting, and then thermostat will switch the opposite mode (Cooling/Heating) to set up the setpoint by same process, and then press "HOLD" key to exit and save temperature setting. We recommend keeping your programmed heating and cooling temperature at least 2˚F (2˚C) apart to allow the Auto Season Changeover to occur when the appropriate temperature span has been reached. There is a Designated Day Override or Permanent Override. However, these overrides are also energy saving settings.

For example, you may have the following temperatures programmed at a given time: Heat Set Temp=68˚F, Cool Set Temp=79˚F. If the room temperature rises above 79˚F, then the thermostat will automatically change to cool mode and turn on the air conditioner.

Likewise, the thermostat will automatically change to heat mode and turn on heat when the room temperature falls below 68˚F.

Filter Monitor

Your thermostat also keeps a record of the number of days that your filter has been in use. This is the actual running time. To maximize your system's performance and energy efficiency, change or clean your filter regularly.

■ When the total fan run time reaches over 16-17 days (about 400 hours), you need clean or change your system's filter, "FILTER" will continue to display until the counter is reset to zero.

■ Press to review total filter usage. "FILTER" displays with the total number usage in days.

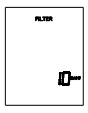

■ To reset the Filter Monitor counter, press and hold the round button for 3 seconds when the filter monitor day shows. The display will blink, and the counter will be reset to zero.

Auto Recovery

Auto Recovery calculates how early to turn your system back on, so that the room temperature is already comfortable by the start of the comfort temperature program period. Auto Recovery works in both Heat and Cool modes.

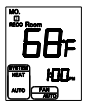

■When the thermostat is in Auto Recovery mode, the display will alternate "RECO" with time, and the program indicator will flash.

■Auto Recovery can be disabled by menu setting.

■Auto Recovery will not operate if Permanent hold or Temporary hold is in operation.

■Auto Recovery can be canceled manually if HOLD is pressed during the recovery process.

■Auto Recovery will be canceled and change to the next period.

Keyboard lock

The keyboard can be locked to prevent unauthorized changes to the thermostat.

■To lock or unlock the keyboard, press and hold the Run key for 3 seconds. The keyboard is locked when LOCK appears on the display.

■All keys are locked. Anytime a key is pressed, LOCK will appear on the screen for 1 second.

■To exit Lock mode press and hold the RUN key for 3 seconds.

Error Mode

If the thermostat is unable to control your system due to an unexpected problem, the thermostat may enter Error Mode. In this condition, the thermostat flashes "E1" on the LCD display, and shuts off your system. when the display show "E4" to warn, it must re-register again, "E4" will disappear after registeration successed. You can set your thermostat back to the original channel to avoid re-registeration.

LCD display	information	LCD display	information
E1	Sensor Error	E4	Channel change without matching with controller

TESPW22 Series Controller manual

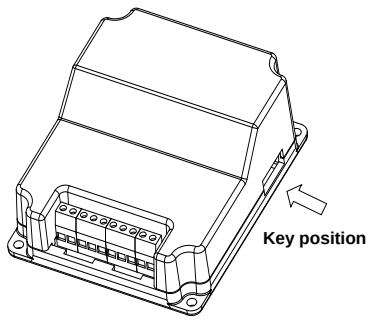

A3900 Series Controller

GENERAL

The A3900 Series wireless set is designed to control the room temperature in industrial, commercial and residential environments. It includes an A3900 Series Wireless Thermostat and an A3900 Series Controller. Wireless data communication between the thermostat and controller enables temperature control.

Read This Before Installing Controller

OPERATION

The A3900 Series Controller receives the signal from the Wireless Thermostat without any wires and controls the cooling and heating equipment.

YOUR THERMOSTAT REPLACES

Description	
Heat Pump (No Aux. or Emergency Heat)	Yes
Heat Pump (with Aux. or Emergency Heat)	Yes
Standard Heating & Cooling Systems	Yes
Two Stage Heating & Two Stage Cooling	Yes
Standard Heating Only Systems	Yes
Millivolt Heating Only Systems– Floor or Wall Furnaces	Yes
Standard Central Air Conditioning	Yes
Gas or Oil Heating	Yes
Electric Furnace	Yes
Hydronic (Hot Water) Zone Heat-2 Wires	Yes
Hydronic (Hot Water) Zone Heat–3 Wires	No

This Controller will NOT control 110/220Volt systems.

POWER SUPPLY

The A3900 Series Controller must be powered by 24 VAC.

MATCHING

The thermostat matched with the Controller at the factory. Simply Power up the Controller and operate the Thermostat. Follow the instructions below only if you find the Thermostat and Controller are not communicating.

Step 1 Make sure the thermostat mode is in the OFF position.
Step 2 Press “PROG” key for 3 seconds until the screen changes to the menu screen.
Step 3 Press “PROG” key to scroll through the menu until the LCD displays ”CRES”.
Step 4 Press the Matching Key on the controller about 1 second. Use the UP key on the thermostat to select “1” immediately. The thermostat will force the controller to match. Press the Hold/Run Key to return to the normal screen.
Step 5 Test by selecting Fan ON in the Thermostat screen. Wait for the radio signal icon to flash once on the screen.

TESTING

This item is only for testing, not for normal output. If the wires are connected, you couldn’t do this test. It may be dangerous to you system.
Step 1 Make sure the thermostat is in the OFF position.
Step 2 Press “PROG” key for 3 seconds until the screen changes to the menu screen.
Step 1 Press the “PROG” key, until it displays “TEST”, change the parameter to “2” by pressing the "up" key. The relays will open one by one.
Step 2 Testing is finished, press the "RUN" key to exit the setting state.
NOTE: This is not for user. User should keep the parameter in “0”.

NOTE: The distance between the thermostat and controller should be longer than 3 Ft, if not it may fail to communicate, requiring a return to the first step.

In the event that the Thermostat and Controller haven't matched, press and hold the key on the right side of the controller for at least 3 seconds. Relays will open and close one by one. The program will exit testing after 3 cycles. This test can be terminated by pressing and holding the button on the side for 3 seconds.

Technical Data

Power	AC24V±10%，50/60Hz
Working environment	32°F~120°F (0℃～50℃)
Range	5～95%RH(non-condensing)
Shell	Fire retardant PC ABS
Dimension	4.5x3.8x1.8 in (116×98×45 mm)（HxWxD）
Connection interface	Each terminal is capable of accepting 2×18 AWG solid copper wires
Wireless carrier wave frequency	433MHz
Communication baud rate	2.4 kbps
Wireless channels	1~10 channels
Communication distance	Beeline distance 300ft in the field (The distance will reduce to 100ft if through walls and floors)

COMPRESSOR PROTECTION

The thermostat provides a 4 minutes delay after shutting off the heating or cooling system before it can be restarted. This delay will prevent damage to your compressor caused by rapid cycling. Note that this delay also applies to the heating system control. It does not provide a delay when there are power outages. You can select the function of "on" or "off" from the configuration.

THERMOSTAT OUTPUT

Standard Terminal Outputs:

Refer to equipment manufacturers' instructions for specific system wiring information. You can configure the controller for use with either multi-stage electric heat systems or multi-stage gas systems. When configured for electric heat, the G terminal (blower/fan) will be energized on a call for heat. This thermostat is designed to operate a single-transformer system. If you have a two-transformer system, cut and tape off one transformer. If the transformer safety circuits are in only one of the systems, remove the transformer of the system with NO safety circuits. If required, replace the remaining transformer with a 75VA Class II transformer. After disconnecting one transformer, the two commons must be connected together. Use the terminal output information below to help you wire the thermostat properly for your multi-stage system. After wiring see CONFIGURATION section for proper thermostat configuration.

THERMOSTAT TERMINALS		
SYSTEM	Single-stage	Multi-stage
C	24 Volt (Common)	
R	24 Volt Emergency (hot)	
E/W1	Heat mode 1st stage	
W2	No output	Heat Mode 2nd stage
Y1	Cool Mode 1st stage	
Y2	No output	2nd stage compressor
G	Blower/Fan Energized on call for Cool (and Heat if configured to Electric Heat)	
O	No output	
B	No output	

Heat Pump Terminal Outputs

Refer to equipment manufacturers' instructions for specific system wiring information. You can configure the thermostat for use with the following heat pump system types: Single stage compressor system; gas or electric backup. This thermostat is designed to operate a single-transformer system. If you have a two-transformer system, cut and tape off one transformer. If transformer safety circuits are in only one of the systems, remove the transformer of the system with NO safety circuits. If required, replace remaining transformer with a 75VA Class II transformer. After disconnecting one transformer, the two commons must be connected together.
Use the terminal output information below to help you wire the thermostat properly for your heat pump system. After wiring, see CONFIGURATION section for proper thermostat configuration.

THERMOSTAT TERMINALS (HEAT PUMP)		
SYSTEM	Heat Pump 1	Heat Pump 2
C	24 Volt (Common)	
R	24 Volt (hot)	
E/W1	Emergency heat output	
W2	Auxiliary	
Y1	Heat and Cool mode 1st stage (compressor)	
Y2	No output	2nd stage compressor
G	Blower/Fan Energized on call for Heat and Cool	
O	Energized in Cool Mode	
B	Energized in Heat mode	

WIRING

All wiring diagrams are for typical systems only. Refer to equipment manufacturers' instructions for specific system wiring information.
NOTE:
1. The BOLD lines are what you should be connecting to the terminals on this new controller.
2. The DASHED lines are optional depending upon your system type.
3. The terminal “NC” means “no connection”. It is no use for user. You needn’t connect it to anything.

Heat only system

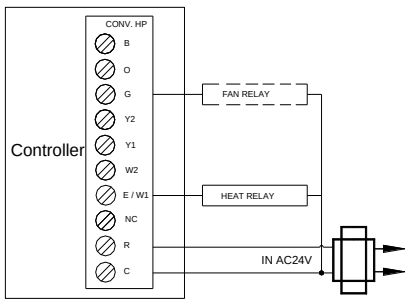

Cool only system

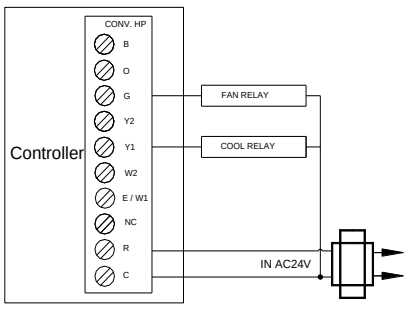

1-stage cooling , heating system for normal mode

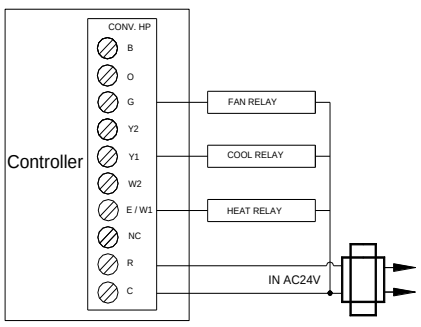

2-stage cooling , heating system for normal mode

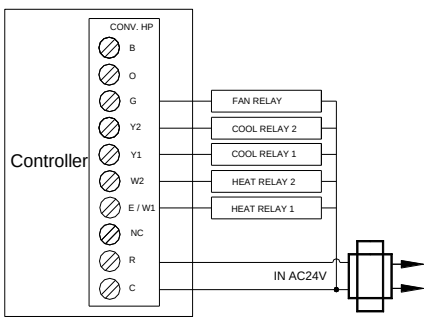

1-stage heat pump system with “AUX” heating

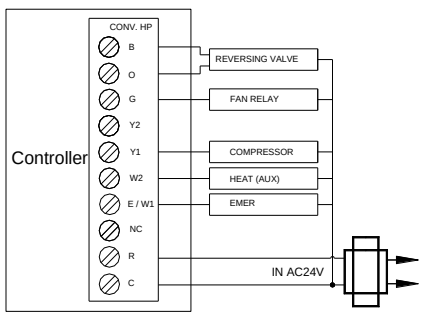

2-stage heat pump system with “AUX” heating

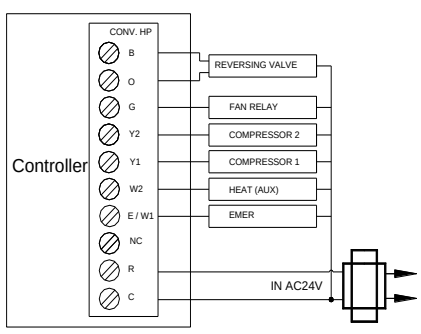

INSTALLATION

Installation guide

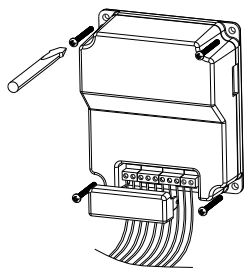

What You Need

This Controller includes four #8 slotted screws and four wall anchors for mounting. To install your controller, you should have the following tools and materials.

■ Slotted Screwdriver(s) ■ Small Philips screwdriver ■ Hammer
■ Electric drill and 3/16” bit

CAUTION:

To prevent electrical shock and/or equipment damage, disconnect electric power to the system at the main fuse or circuit breaker box until installation is complete.

WARNING

Do not use on circuits exceeding specified voltage. Higher voltage will damage the Controller and could cause shock or fire hazard. Do not short out terminals on gas valve or primary control to test. Shorts or incorrect wiring will damage thermostat and could cause personal injury and/or property damage.

Transparent cover installation:

Press the transparent cover down as shown, until it snaps in place.

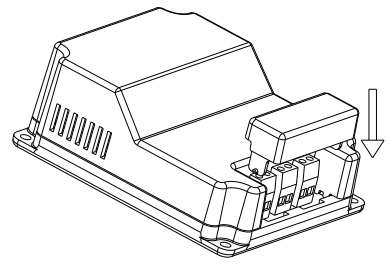

Transparent cover uninstall：

Insert the screwdriver between the transparent cover and black cover and gently pry it up.

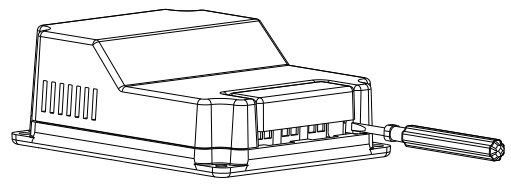

TROUBLE SHOOTING

Problem	Solution
SCRAMBLED OR DOUBLE DISPLAY (numbers over numbers)	1. Remove clear mylar sticker.
NO DISPLAY	1. Charge Li-battery
ENTIRE DISPLAY DIMS	1. Charge Li-battery
PROGRAM DOES NOT CHANGE AT YOUR DESIRE SETTING	1. Check that the time is set properly to “AM” or “PM” 2. Check that the thermostat is not in “HOLD” mode. 3. Check for the correct day settings.
AUTO/FAN DOES NOT TURN ON	1. Change HE/HG parameter to opposite setting . 2. The thermostat may be in the AUTO Mode. Look for ”AUTO” on the LCD display. If the Heat and Cool program temperature are close, then the thermostat requires a larger room temperature change before changing from Heat or Cool. 3. There may be as much as 4 minute delay before the Heat or Cool system turns on. Wait and check. (Compressor protection delay). 4. Check your circuit breakers and switches to ensure there is power to the system. 5. Make sure your furnace blower door is closed properly.
ERRATIC DISPLAY	1. Replace unit.
CONTROLLER NO OUTPUT	1. Check if the thermostat is working, and if the power is supplied to the controller. 2. Check if the communication is correct, the controller will close all the relays if there is no data received in 30 minutes. 3. Match the thermostat and the controller again.
COMMUNICATION FAILED	1. Check if the thermostat is working, if the thermostat is activated, and if the power is supplied to the controller. 2. The distance between the thermostat and controller should be longer than 3ft, shorter than 300ft in the field. 3. Match the thermostat and the controller again.
COMMUNICATION UNUSUAL	1. Need to change channel to re-register.
DISPLAY ”E4”	1. Match the thermostat and the controller again.

If you experience any other problems, call us for technical assistance.